Data Flow Diagrams

Level 0 DFD

Level 1 - Seller DFD

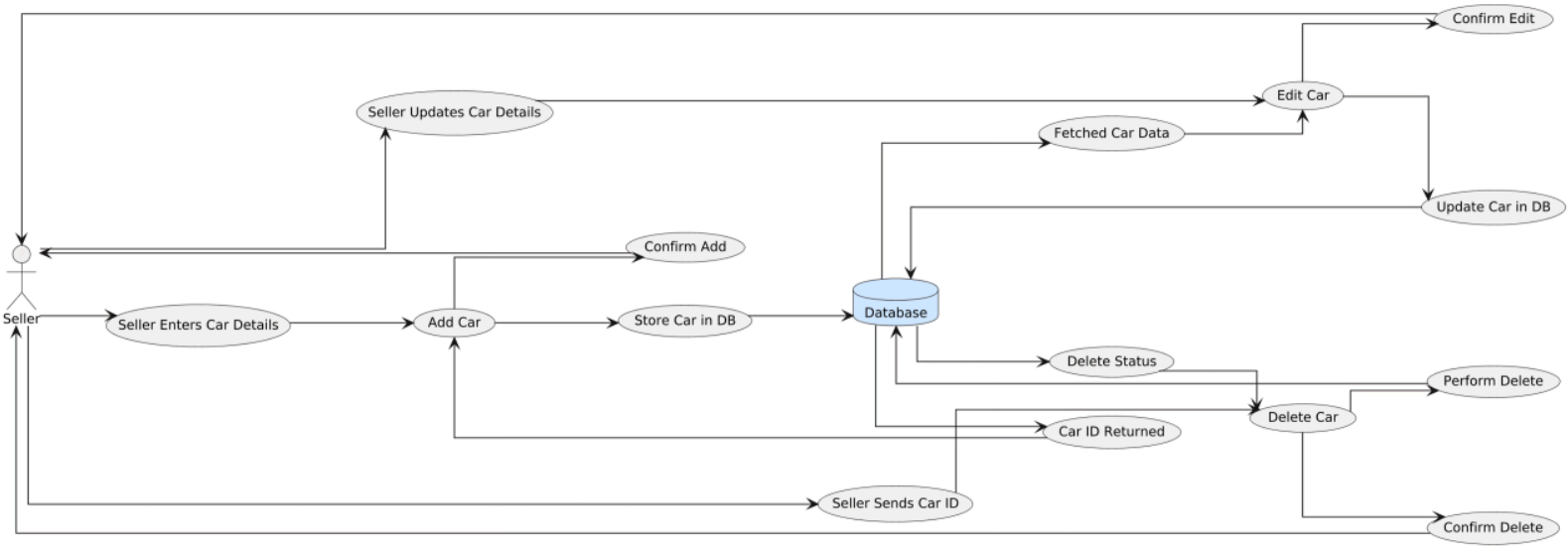

Level 1 - Buyer DFD

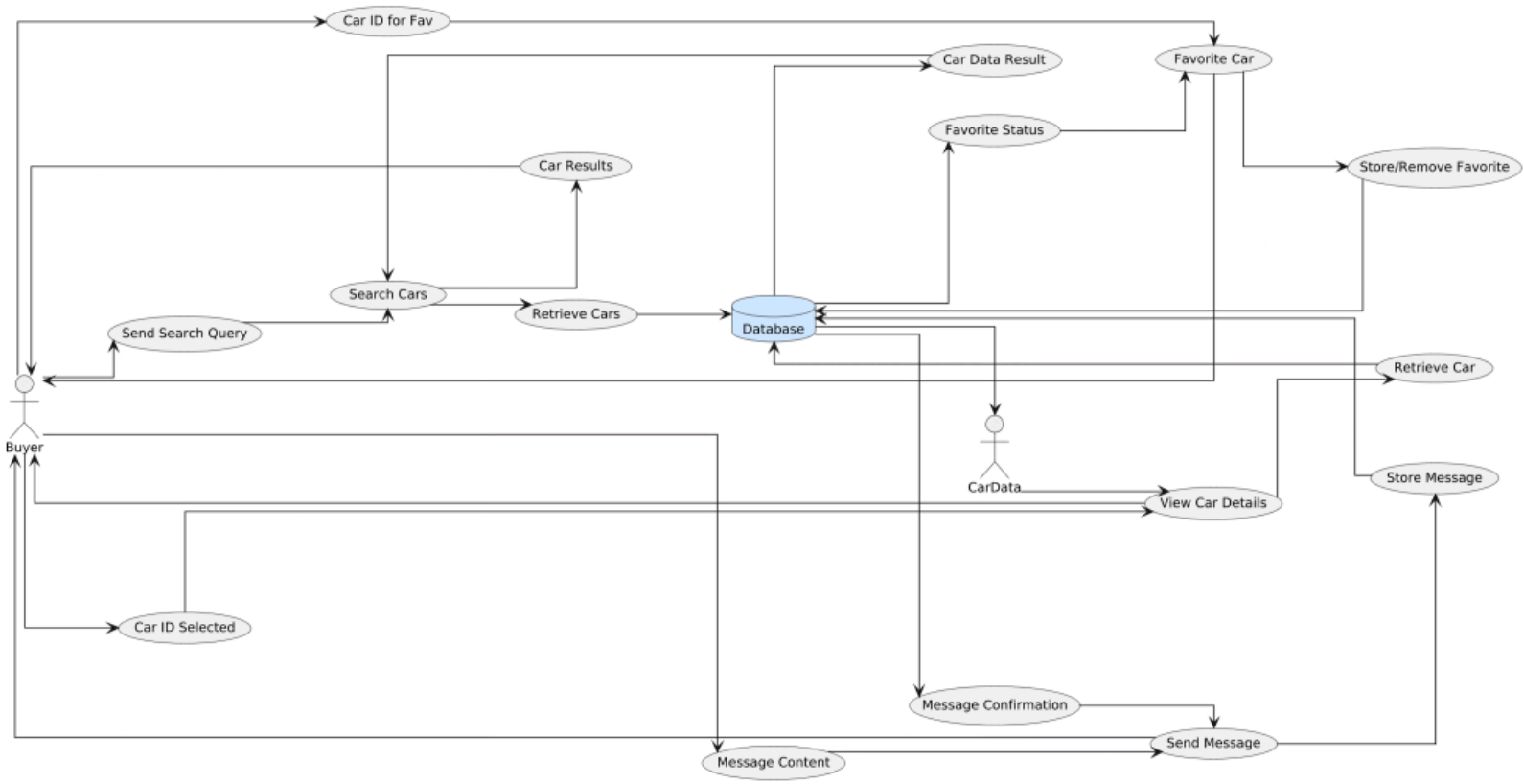

Level 1 - Buyer DFD

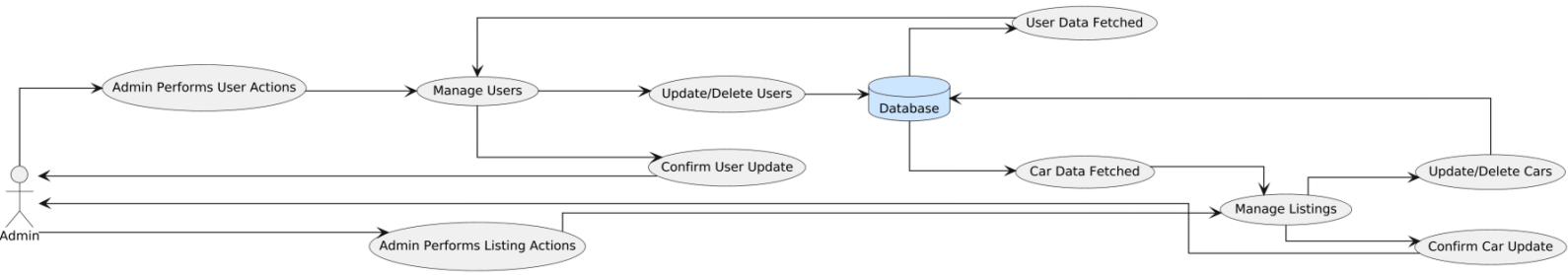
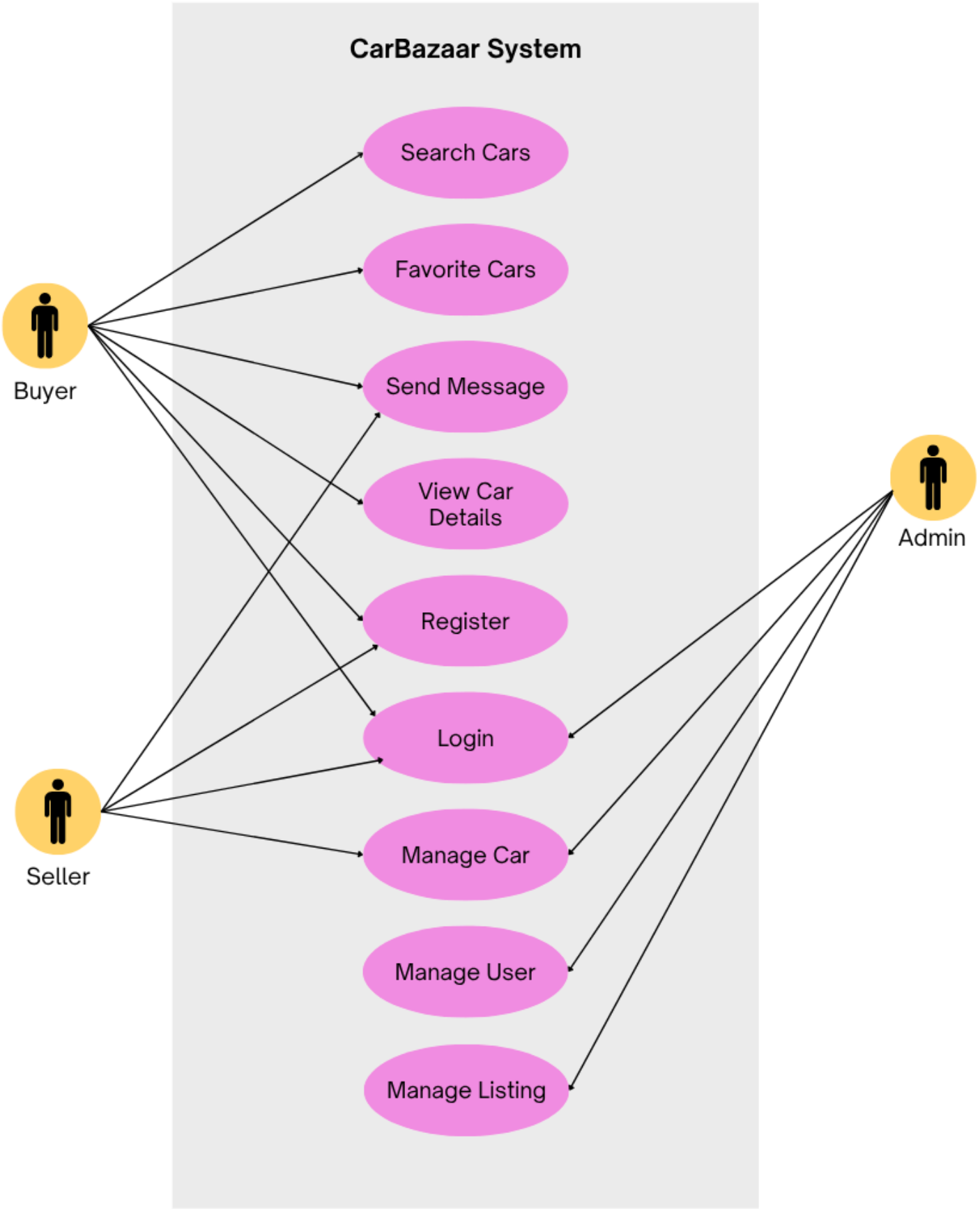
USE CASE DIAGRAM